PUBLISHED: 16-OCT-2012
2017.0 DISCOVERY (LR), 307-01

AUTOMATIC TRANSMISSION/TRANSAXLE - VEHICLES WITH: 8HP45 8-SPEED AUTOMATIC TRANSMISSION AWD

TRANSMISSION SUPPORT INSULATOR

(G1509716)

REMOVAL AND INSTALLATION

12.45.08	MOUNTING - REAR - CENTRE - RENEW	3000 CC, AJ V6 (AJ126)	0.7	USED WITHINS

REMOVAL

NOTE:

Some variation in the illustrations may occur, but the essential information is always correct.

1. Disconnect the battery ground cable.
   For additional information, refer to: Specifications (414-00, Specifications).

2. **WARNING:**

   Make sure to support the vehicle with axle stands.

   Raise and support the vehicle.

3.

transmissionmanuals.com

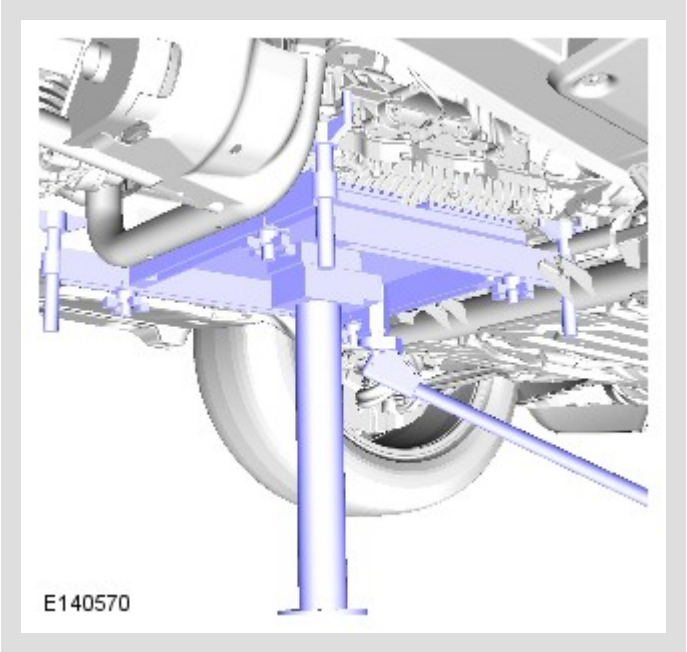

Using a suitable hydraulic jack, support the transmission.

4.

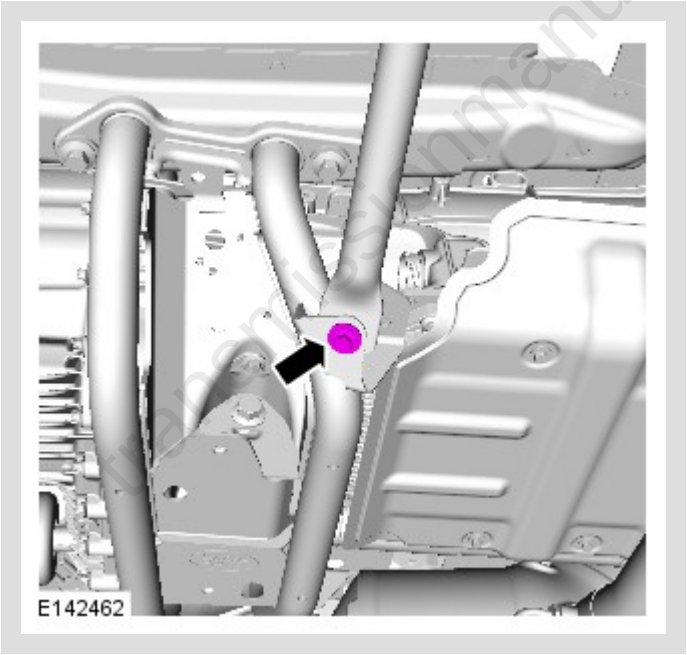

TORQUE: 24 Nm

5.

CAUTION:

Note the fitted position of the component prior to removal.

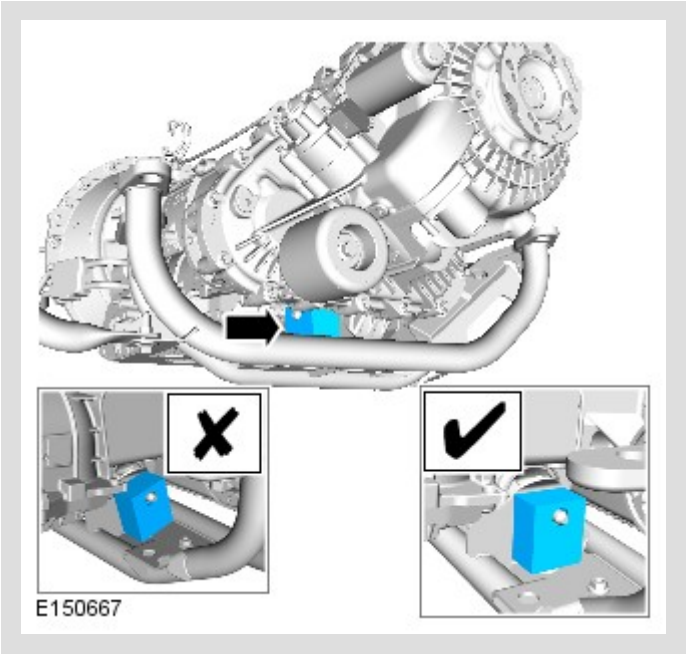

6.

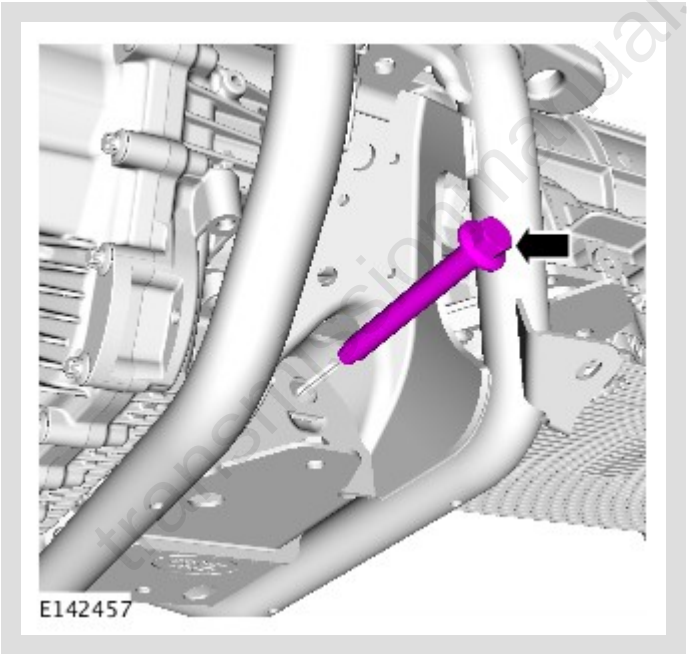

TORQUE: 175 Nm

7.

transmissionmanuals.com

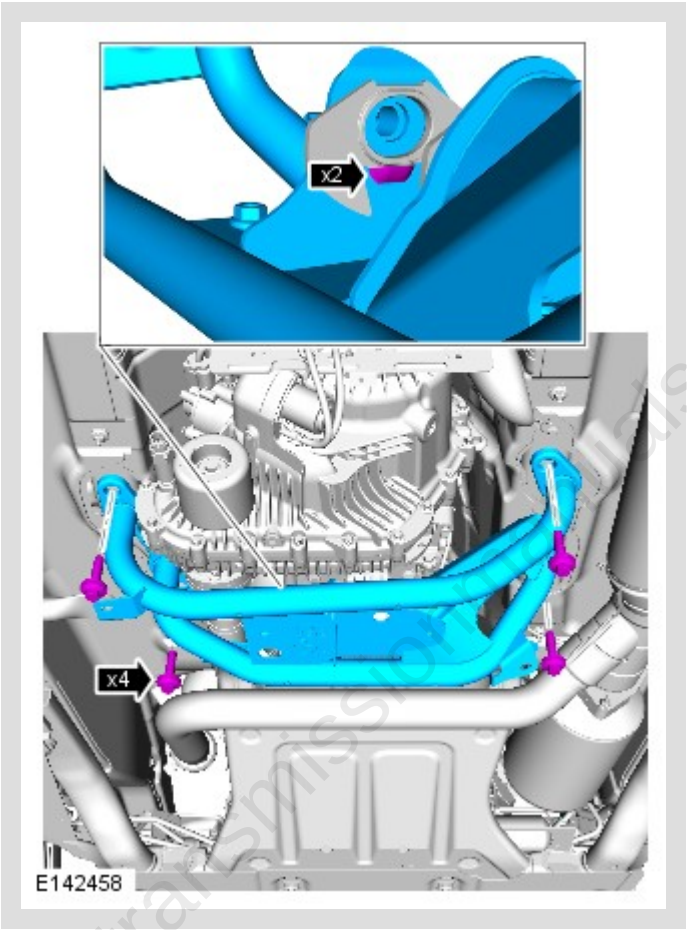

TORQUE: 110 Nm

8.

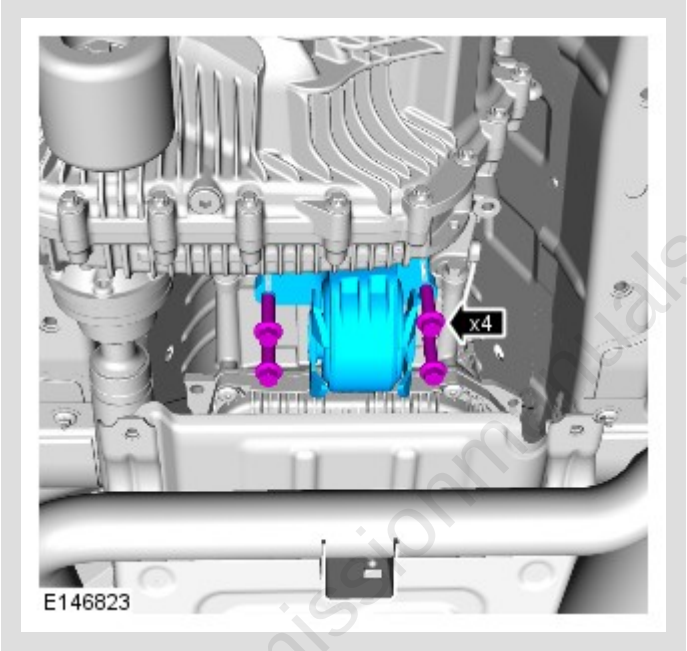

TORQUE: 60 Nm

INSTALLATION

1. To install, reverse the removal procedure.

transmissionmanuals.com